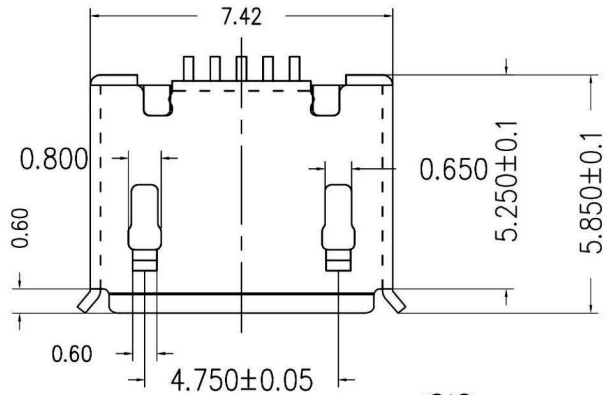

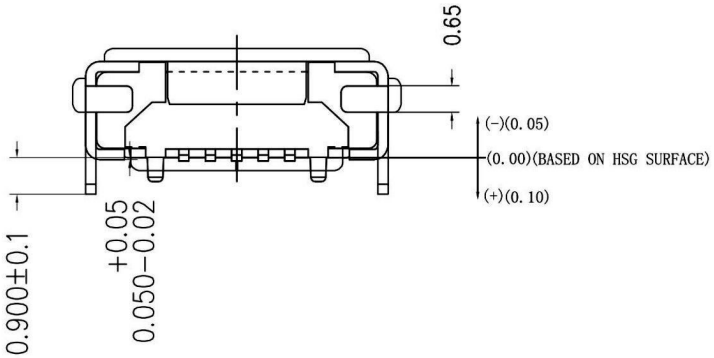

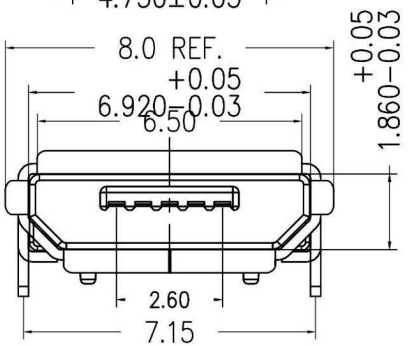

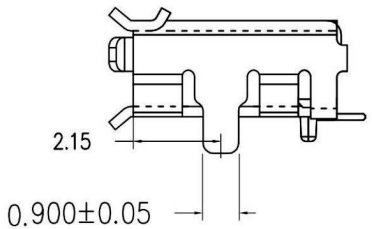

Specifications:

Electrical:

Current Rating
1.0A/contact terminal

Voltage Rating
30V DC

Contact Resistance
50 milliohms Max

Dielectric Withstanding Voltage:
300 V AC AT Sea Levol

Insulation Resistance:
100MEGA ohms MIN

Raw material:

Plastic cement:
Hinh Temperature Thermoplastic,
UL 94V-0 LCP Black
Contact:Copper Alloy C2680
Shell: Copper Alloy C2680

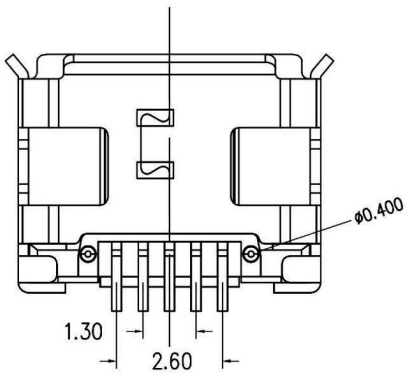

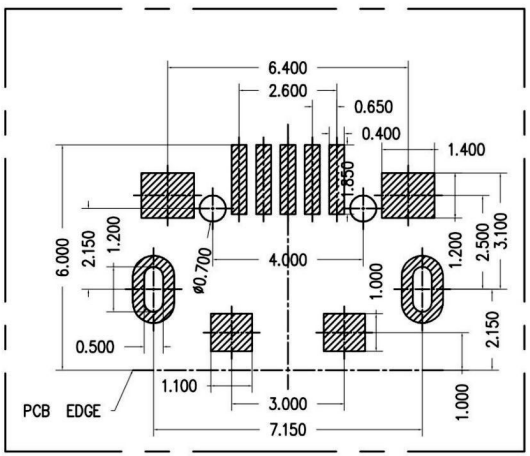

PCB

1	Terminal	Brass (2680 EH)	Gold Flash	5
2	Insulator	LCP	Black Color	1
3	Shell	Brass (2680 EH)	Matte Tin / Nickel Plating	1

RoHS Compliant

APPD. 核准	HELEN	SCALE 比例	參考
DWG. 製圖	ABBY	UNIT 單位	MM
DATE 制表日	2018/04/17	PAGE 張數	1 OF 1

TOLERANCE	
X.	±0.50
.X	±0.20
.XX	±0.10
.XXX	±0.02
ANG.	±1.00°

SIZE. 紙張尺寸 A4

REV. 版次 B

PART NAME 品名
Micro USB B TYPE FEMALE 5P PIN FOOT:SMT TYPE
SHELL FOOT:DIP TYPE WITH LOCATING PEG
(PITCH:4.0mm) GOLD FLASH PLATING
BLACK INSULATOR MATERIAL:LCP ROHS

PART NO. 料號 C8375-05BFBGYXXR